# Move with the times

**AlphaRex time switches make programming even easier than ever before. Units can now be set up by following simple on-screen instructions or, alternatively, using the data key which can be programmed via your PC using its very own USB adaptor.**

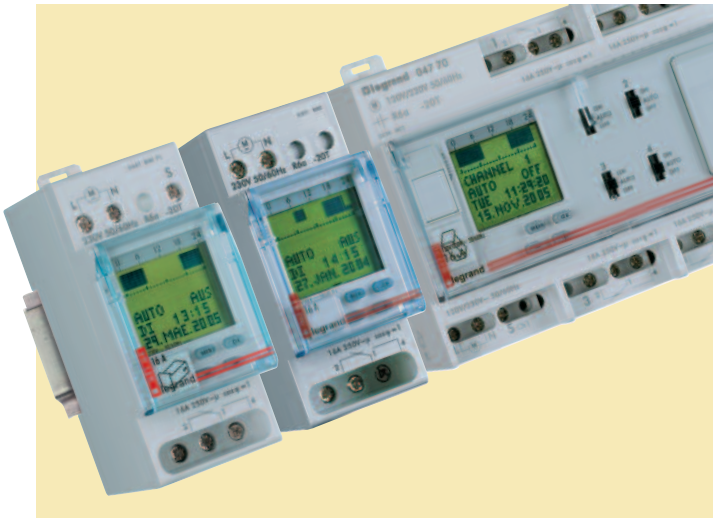

## FEATURES

- Set up, save, edit and manage your settings using the advanced PC programming software and USB adaptor
- 24/7 display shows stored programmes at a glance
- Clear back lit display and on-screen instructions for easy identification of status
- 4 function keys for simple programming if not using data key
- Finger protection terminals with screws
- Exceptional accuracy of +/- 0·2 seconds per day


ibemo Kazakhstan - 09302 Republic of Kazakhstan, West Kazakhstan Oblast, Aksai, Rhatanoe, BKKS office complex
Phone: +7 71133 93077, Fax: +7 71133 93077, E-Mail: info-kz@ibemo.de

# AlphaRex time switches
## digital for rail

0047 61

0047 72

0047 73

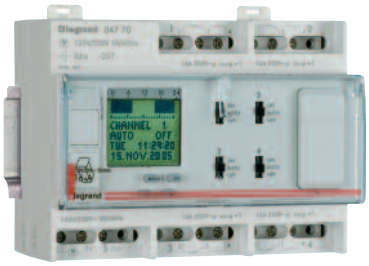
0047 70

0047 81

*Technical information (p. 366-367)*

Conform to EN 60730-1 and EN 60730-2-7
LCD digital display and text based programming for easier use
Mount on DIN rail EN 60715

| Pack | Cat. Nos. | AlphaRex |
|---|---|---|
| | | Accuracy : ± 0·2 second per day<br>Programmable for 1 minute minimum at 1 minute steps either as 24 hour or 7 day using preset groups of days : Mon-Sun, Mon-Fri, Sat-Sun or individual days<br>Programmable either directly on the time switch or via a PC with the Legrand software and data key<br>Data keys can also be used to transfer programmes from one unit to another or used to store data and provide a security back up<br>1 programme consists of 1 ON and 1 OFF time and the allocation of any day of the week or a combination of days, plus the selected channel on the two channel version |
| | | **Additional features :**<br>Built in hour counter up to 65535 hours with reset<br>Back lit display and buttons for easy working during set up<br>Lithium high temperature battery provides a 6 year working reserve<br>EEPROM memory keeps your programme stored indefinitely<br>Optional automatic summer/winter time change<br>Manual override (permanent ON or OFF until manual reset)<br>Automatic override, changes contact position until next automatic ON time (ON becomes OFF; OFF becomes ON, till next programmed ON)<br>Sealable transparent cover with or without data key inserted<br>Holiday and random security programmes<br>D21 version includes a PULSE function providing up to 84 starts from 1 second to 59 mins 59 secs duration |
| | | **AlphaRex D21**<br>24 hour or 7 day, 56 programmes, 1 channel<br>1 x 250 V 50 Hz, 16 A voltage free c/o contact |
| 1 | 0047 61 | 230 V 50/60 Hz supply voltage |
| 1 | 0047 63 | 24 V 50/60 Hz or DC supply voltage |
| | | **AlphaRex D22**<br>24 hour or 7 day, 2 x 28 programmes, 2 channels<br>2 x 250 V 50 Hz, 16 A voltage free c/o contacts |
| 1 | 0047 71 | 230 V 50/60 Hz supply voltage |
| 1 | 6047 72 | 24 V 50/60 Hz or DC supply voltage |

| Pack | Cat. Nos. | AlphaRex DY64 |
|---|---|---|
| | | Working reserve : 5 years<br>Accuracy : ±0·2 seconds per day<br>Programmable for 1 second min., either direct or via a PC using the data key and USB adaptor with software (see below) |
| | | Block programming in preset groups of days or individual days<br>Includes optional Astro function, sunrise - sunset with offset for lighting control<br>A programme consists of an ON/OFF time and their assignment to certain days |
| | | 84 programmes per channel possible :<br>• 28 weekly/astronomical programmes<br>• 28 yearly programmes<br>• 28 exceptional programmes |
| | | **Additional features :**<br>Backlit display and buttons<br>Programmes are stored in an EEPROM<br>Programmes are shown as a weekly matrix on the display<br>Optional automatic summer/winter time change (daylight saving)<br>Manual override (ON/OFF/AUTO) for each channel on the front face<br>Manual switching<br>Sealing cover (lead seal not supplied), with or without the data key inserted<br>Calculation of sunrise and sunset by Astro function, using programming date, time and local co-ordinates - does not require an external light sensor<br>The Astro switching times can be adjusted asymmetrically for up to 120 minutes<br>One channel includes an input control enabling remote activation irrespective of the programme setting<br>Option to create a cyclical repetitive programme on channel 1 |
| | | **AlphaRex DY64 – 6 modules**<br>336 programmes total, 4 channels 16 A – 230 V∿<br>4 SPDT voltage free contacts, supplied with DY64 data key and software version 3.0 |
| 1 | 0047 70 | 120/230 V∿ 50/60 Hz supply voltage |

| Pack | Cat. Nos. | Accessories |
|---|---|---|
| | | **Data key** |
| 1 | 0047 72 | Enables programmes to be stored and/or transferred from one time switch to another<br>When used with the USB adaptor (Cat. No. 0047 73 below) the data key can be programmed via a PC |
| | | **USB adaptor with software** |
| 1 | 0047 73 | Enables programmes to be written or read on a PC then transferred using the data key (Cat. No. 0047 72 above) to the time switch<br>Version 3·0 system requirements : Windows® (1) 2000, Windows® (1) ME, Windows® (1) XP, and Windows® (1) 98 second edition, 40 MB free disc space |
| | | **Data key box** |
| 1 | 0057 91 | 1 module width - mounts on DIN rail to store data keys |

(1) Windows is a registered trademark of the Microsoft Corporation

| Pack | Cat. Nos. | Accessories |
|---|---|---|
| | | **Data key** |
| 1 | 0047 81 | Enables programmes to be stored and/or transferred from one time switch to another<br>When used with the USB adaptor (Cat. No. 0047 73 below) the data key can be programmed via a PC |
| | | **USB adaptor with software** |
| 1 | 0047 73 | Enables programmes to be written or read on a PC then transferred using the data key (Cat. No. 0047 72 above) to the time switch<br>Version 3·0 system requirements : Windows® (1) 2000, Windows® (1) ME, Windows® (1) XP, and Windows® (1) 98 second edition, 40 MB free disc space |
| | | **Data key box** |
| 1 | 0057 91 | 1 module width - mounts on DIN rail to store data keys |

(1) Windows is a registered trademark of the Microsoft Corporation



ibemo Kazakhstan - 050012 Republic of Kazakhstan, Almaty, Medeu district, Al-Farabi Ave., 75, Rahat Palace, BKKS office complex
Phone: +7 71133 93077, Fax: +7 71133 93074, E-Mail: info-kz@ibemo.de

legrand

# AlphaRex time switches
digital for rail

## ■ Programming

**Just 4 buttons put you in control**
**Simple, easy to set up and easy to use…**

With pre-installed English text that can be changed to German, French, Spanish or Italian

Central European time and date have been factory set with European summer/winter time change installed

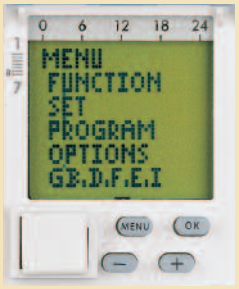


To set UK time :
press MENU button select ***SET*** confirm OK;
select ***TIME/DATE*** confirm OK;
amend hour to UK hour confirm OK;
confirm remainder OK

**Now set your ON/OFF times…**

Press the MENU button, select ***PROGRAM*** from the menu
Select the function you need i.e. ***NEW, EDIT, CHECK*** or ***DELETE***

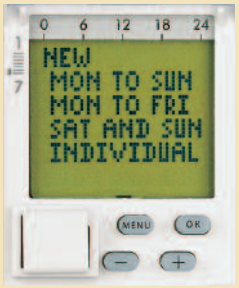


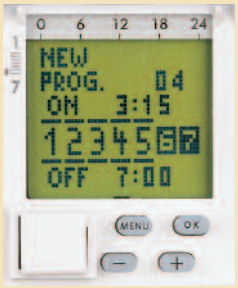


Example :
Select ***NEW*** confirm OK;
Select block or individual days confirm OK;
Set ***ON*** time Hours and Mins. confirm OK;
Set ***OFF*** time Hours and Mins. confirm OK;
Press the MENU button to return to normal operation

You can move forwards or backwards with the –+ buttons

Either programme directly on the time switch or via your PC
Using the data key you can transfer the programme to another time switch of the same model

More features than ever before :
- holiday programme
- hour counter with reset
- pulse function
- random function
- contrast control
- more ON/OFF controls

## ■ Technical information

| Type<br>Cat. No. | AlphaRex D21<br>0047 61/0047 63 | AlphaRex D22<br>0047 71/6047 72 |
|---|---|---|
| **Programme** | 24 hour or 7 day | |
| **No. of channels** | 1 | 2 |
| **No. of ON-OFF actions per day/week** | 56 | 2 x 28 |
| **Pulse start times** | 84 | Nil |
| **Pulse duration** | 1 second min. to 59 minutes 59 seconds max. | N/A |
| **Switching capacity :**<br>**cos φ = 1**<br>**incandescent lamp**<br>**cos φ = 0·6** | 16 A<br>8 A<br>10 A | |
| **Contact** | 1 changeover switch | 2 changeover switches |
| **Terminal capacity** | 1·5 mm - 4 mm single/1·5 mm - 2·5 mm stranded | |
| **IP rating** | IP 20 | |
| **Min. prog. time** | 1 minute | |
| **Switching step** | 1 minute | |
| **Accuracy** | ± 0·2 second per day | |
| **Working reserve**(1) | 6 years | |
| **Programme memory** | Unlimited (EEPROM) | |
| **Manual switching** | Override and permanent | |
| **No. of 17·5 mm modules** | 2 | |
| **Operating temp.** | –20 °C . . . +55 °C | |
| **Storage temp.** | –20 °C . . . +60 °C | |
| **Weight** | 130 g | 136 g |

(1) For time and date only

A programme consists of an ON and OFF time and the assigned day(s)

## ■ Dimensions

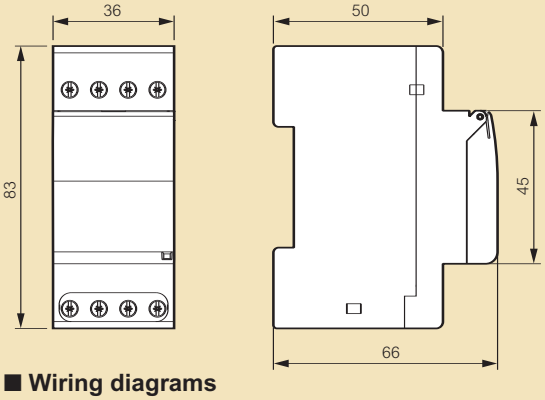


## ■ Wiring diagrams

**AlphaRex D21**

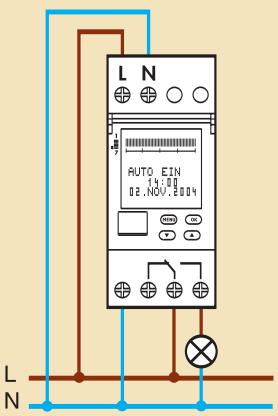


**AlphaRex D22**

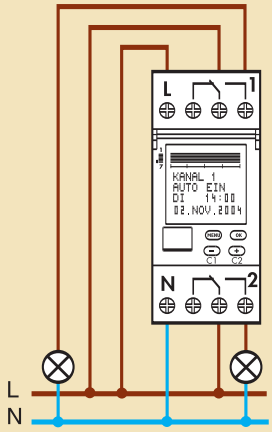



ibemo Kazakhstan - 09302 Republic of Kazakhstan, West Kazakhstan Oblast, Aksai, Pharaon Oblast, Aksai, Pharaon, BKKS office complex
Phone: +7 71133 93077, Fax: +7 71133 93077, E-Mail: info-kz@ibemo.de

## ■ Programming

**Annual, weekly, DY64 time switch digital for rail - 4 channel**

The AlphaRex DY64 time switch provides for annual, weekly and exceptional programming :

**Weekly programme menu :**

Used to automatically switch on-off simple circuits, such as lighting or boilers. A weekly programme consists of an **ON** time and an **OFF** time and the associated switching days.

- **MON to SUN :** The days are preset, just enter the **ON** and **OFF** times. This is used where the same programme is repeated on each day.
- **INDIVIDUAL :** Enter both the **ON** and **OFF** time plus the switching day(s). This is used where the same programme is only repeated on certain days of the week or different programmes are required on various days.

**Annual programme menu :**

This permits the input of annual programmes or additional programmes to those above, which are executed during a specific period of time. The annual and weekly programmes on the same channel are integrated together as described. Time periods are set by entering the start date and the end date.

- Select **EVERY YEAR** if the programme is to be repeated during the same period each year. E.g. Christmas, national holidays, birthdays.
- Select **ONCE** if the programme is to be executed only during a single period. E.g. vacation periods, where the start date and end date differ each year

**Exceptional programme menu :**

The above preset programmes are replaced by any exceptional programme for as long as the exceptional programme is active. However, other exceptional programmes will be executed while an exceptional programme is active. The various exceptional programmes are integrated together.

Using the exceptional programme :

- The **EVERY YEAR** option should be selected if the exceptional programme is to be activated for the same period and time every year.
- The **ONCE** option is used for programmes that only require a single period and where the start and end dates differ each year e.g. vacation periods.
- The **MON to SUN** option runs from 00:00 hours on the start date to 24:00 hours on the end date. During this period the output of the related channel only switches the exceptional programme setting.
- The **INDIVIDUAL** option runs from 00:00 hours on the start date to 24:00 hours on the end date. During this period the output of the related channel switches only as defined in the set exceptional programme.
- The **PROG ON** option enables the user to make the output channel permanently ON during the start (ON) and end (OFF) times entered.
- The **PROG OFF** option enables the user to make the output channel permanently OFF during the start (ON) and end (OFF) times entered.

**Cycle function for channel 1**

The standard function on channel 1 can be changed into a cycle function to provide on and off cyclically. Setting the **PERIOD** and the **SWITCH ON** times activates this option

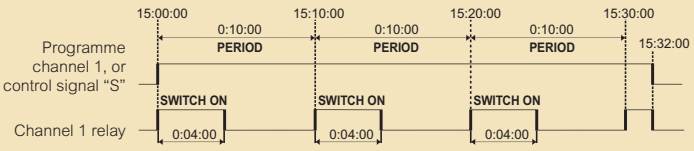


## ■ Technical data

| Type<br>Cat. No. | AlphaRex DY64<br>0047 70 |
|---|---|
| No. of channels | 4 |
| Switching capacity :<br>cos φ = 1<br>incandescent lamp<br>cos φ = 0·6 | <br>16 A<br>8 A<br>10 A |
| IP rating | IP 20 |
| Shortest switching time | 1 second |
| Accuracy | ±0·2 seconds per day or frequency |
| Switch output | 4 SPDT |
| Programmes | 3 x 4 x 28 (336) |
| Control input with delay time | 0 min - 23 hr 59 min |
| Working reserve | 5 years |
| Switching increment | 1 second |
| No. of 17·5 mm modules | 6 |
| Operating temperature | –20 °C . . . +55 °C |

## ■ Dimensions

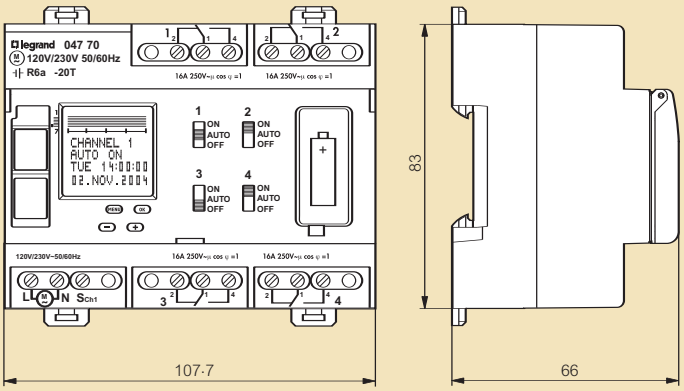


## ■ Wiring diagram

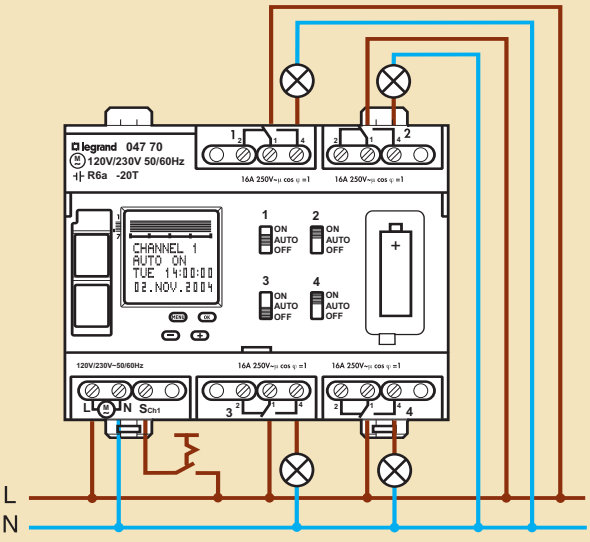




ibemo Kazakhstan - 09302 Republik of Kazakhstan, West Kazakhstan Oblast, Aksai, Rostan Oblast, Aksai, Complexe, BKKS office complex
Phone: +7 71133 93077, Fax: +7 71133 93074, E-Mail: info-kz@ibemo.de

# MicroRex™ time switches
digital for rail

6047 74

0037 00

Conform to EN 60730-1 and EN 60730-2-7
Supply voltage : 230 V∿ 50/60 Hz
LCD digital display
Mount on DIN rail EN 60715

| Pack | Cat. Nos. | MicroRex D Plus |
|---|---|---|
| | | Working reserve : 6 years<br>Accuracy : ±1 second per day<br>Programmable for 1 minute min. at 1 minute steps either as 24 hour/7 day using pre-set groups of days<br>One programme consists of 1 "ON" and 1 "OFF" time and the allocation of any day of the week or a combination of days. Plus the selected channel<br>*Example :*<br>Prog. 1 On 07.00hrs Off 08.15hrs Mon-Fri Ch1<br>Prog. 2 On 16.00hrs Off 20.15hrs Mon-Fri Ch2<br>Prog. 3 On 10.00hrs Off 16.15hrs Sat-Sun Ch1<br>**Additional features :**<br>EEPROM memory stores programme indefinitely<br>Optional automatic summer/winter time change<br>Manual override (ON or OFF)<br>Automatic advance (changes contact position until next automatic ON time) |
| | | **MicroRex D21 Plus** |
| 1 | 6047 74 | 24 hour or 7 day, 28 programme, 1 channel<br>1 x 16 A voltage free c/o contact |
| | | **MicroRex D22 Plus** |
| 1 | 6047 77 | 24 hour or 7 day, 2 x 14 programme, 2 channel<br>2 x 16 A voltage free c/o contacts |

| | | MicroRex D |
|---|---|---|
| | | Working reserve : 100 hours<br>Accuracy : ±2·5 seconds per day<br>**7 day programme**<br>Programmable for 1 minute min. at 1 minute steps<br>**Additional features :**<br>Manual advance/override (ON-OFF)<br>Automatic override (ON-OFF) for holidays, weekends or bank holidays up to 99 days successively<br>Automatic summer/winter setting |
| | | **MicroRex D11 – 1 module** |
| 1/30 | 0037 00 | 8 programmes, 1 channel<br>1 x 16 A – 250 V∿ voltage free c/o contacts with 8 "ON-OFF" per day or per week |

# MicroRex™ time switches
digital for rail

## ■ Technical information

| Type<br>Cat. No. | MicroRex D21 Plus<br>6047 74 | MicroRex D22 Plus<br>6047 77 | MicroRex D11<br>0037 00 |
|---|---|---|---|
| **Programme** | 24 hour or 7 day | | 7 day |
| **No. of channels** | 1 | 2 | 1 |
| **No. of ON-OFF actions per day/week** | 28 | 2 x 14 | 8 |
| **Switching cap :**<br>**cos φ = 1**<br>**incandescent lamp**<br>**cos φ = 0·6** | 16 A<br>5 A<br>8 A | | 16 A<br>4 A<br>10 A |
| **Contact** | 1 c/o | 2 c/o | 1 c/o |
| **Terminal capacity** | 1·5 - 4 mm single/1·5 - 2·5 mm stranded | | |
| **IP rating** | IP 20 | | |
| **Min. prog. time** | 1 minute | | |
| **Switching step** | 1 minute | | |
| **Accuracy** | ±1 second per day | | ±2·5 sec/d |
| **Working reserve**(1) | 6 years | | >100 hrs |
| **Prog. memory** | EEPROM | | – |
| **Manual switching** | Override and permanent | | |
| **No. of 17·5 mm modules** | 2 | | 1 |
| **Operating temp.** | –20 °C . . . +55 °C | | –10 °C. . .+55 °C |
| **Storage temp.** | –20 °C . . . +60 °C | | – |
| **Weight** | 130 g | | 100 g |

(1) For time and date only

## ■ Dimensions and wiring diagrams

**MicroRex D21/D22 Plus**

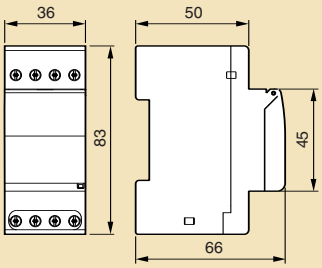


**Wiring diagram**

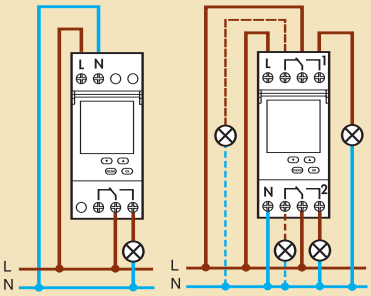


**MicroRex D11**

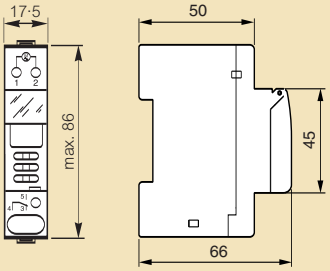


**Wiring diagram**

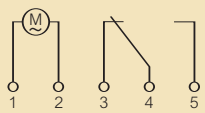



ibemo Kazakhstan - 09302 Republic of Kazakhstan, West Kazakhstan Oblast, Aksai, Pharaonic, BKKS office complex
Phone: +7 71133 93077, Fax: +7 71133 93074, E-Mail: info-kz@ibemo.de

# MaxiRex™ time switches
**digital surface or 72 x 72 panel mounting**

0496 82

Conform to EN 60730-1 and EN 60730-2-7
Supply voltage : 230 V∿ 50/60 Hz
Accuracy : ±1 second per day
LCD digital display
Programmable for 1 minute minimum at 1 minute intervals

| Pack | Cat. Nos. | MaxiRex D Plus |
|---|---|---|
| | | Working reserve : 6 years<br>Accuracy : ±1 second per day<br>Programmable for 1 minute min. at 1 minute steps either as 24 hour/7 day using pre-set groups of days<br>One programme consists of 1 "ON" and 1 "OFF" time and the allocation of any day of the week or a combination of days. Plus the selected channel<br>*Example :*<br>Prog. 1 On 07.00hrs Off 08.15hrs Mon-Fri Ch1<br>Prog. 2 On 16.00hrs Off 20.15hrs Mon-Fri Ch2<br>Prog. 3 On 10.00hrs Off 16.15hrs Sat-Sun Ch1<br>**Additional features :**<br>EEPROM memory stores programme indefinitely<br>Optional automatic summer/winter time change<br>Manual override (ON or OFF)<br>Automatic advance (changes contact position until next automatic ON time) |
| | | **MaxiRex D72/1 Plus** |
| 1 | 0496 80 | 24 hour or 7 day, 28 programme, 1 channel<br>1 x 16 A voltage free c/o contact |
| | | **MaxiRex D72/2 Plus** |
| 1 | 0496 82 | 24 hour or 7 day, 2 x 14 programme, 2 channel<br>2 x 16 A voltage free c/o contacts |

| | | Accessories |
|---|---|---|
| 5 | 0498 32 | Clip-on support frame for panel mounting |
| 5 | 0044 09 | DIN rail ⎵ adaptor |

# MaxiRex™ time switches
**digital surface or 72 x 72 panel mounting**

## ■ Technical information

| Type<br>Cat. No. | MaxiRex D72/1 Plus<br>0496 80 | MaxiRex D72/2 Plus<br>0496 82 |
|---|---|---|
| **Programme** | 24 hour or 7 day | |
| **No. of channels** | 1 | 2 |
| **No. of ON-OFF actions per day** | 28 | 2 x 14 |
| **Switching capacity :**<br>**cos φ = 1**<br>**incandescent lamp**<br>**cos φ = 0·6** | <br>16 A<br>5 A<br>8 A | <br>16 A<br>5 A<br>8 A |
| **Contact** | 1 changeover switch | 2 changeover switches |
| **Min. prog. time** | 1 minute | |
| **Switching step** | 1 minute | |
| **Accuracy** | ±1 second per day | |
| **Working reserve**(1) | 6 years | |
| **Programme memory** | EEPROM | |
| **Manual switching** | Override and permanent | |
| **Operating temp.** | –20 °C . . . +55 °C | |
| **Storage temp.** | –20 °C . . . +60 °C | |
| **Weight** | 178 g | 204 g |

(1) For time and date only

## ■ Dimensions

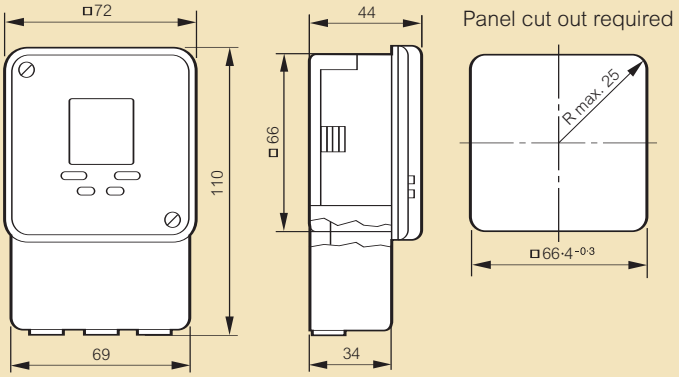


## ■ Wiring diagrams

**MaxiRex D72/1 Plus**

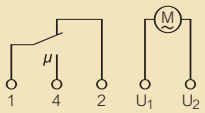


**MaxiRex D72/2 Plus**

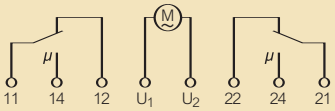


**MaxiRex D72/2 Plus**

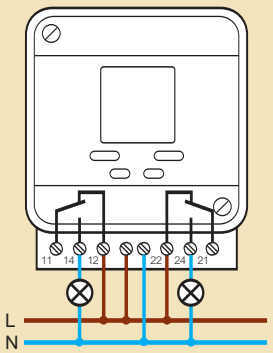


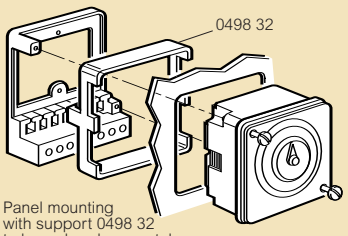


Panel mounting with support 0498 32 to be ordered separately

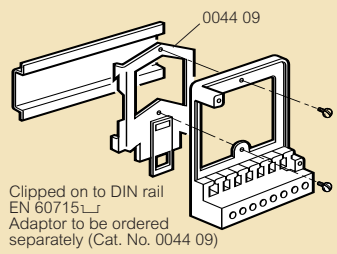


Clipped on to DIN rail EN 60715⎵
Adaptor to be ordered separately (Cat. No. 0044 09)



ibemo Kazakhstan - 09302 Republic of Kazakhstan, West Kazakhstan Oblast, Aksai, Rhatan Oblast, Aksai, Pramzone, BKKS office complex
Phone: +7 71133 93077, Fax: +7 71133 93077, E-Mail: info-kz@ibemo.de

# MicroRex™ time switches
analogue for rail

0037 30

0037 40

0037 52

Conform to EN 60730-1 and EN 60730-2-7
Supply voltage : 230 V∿ +10% –15%
Accuracy : ±5 minutes per day(1)
Voltage free contacts with ON-OFF-AUTOMATIC 3 position switch
Mount on DIN rail EN 60715

| Pack | Cat. Nos. | MicroRex – 1 module |
|---|---|---|
| | | **24 hour programme**<br>Programmable for 15 minutes minimum at 15 minute intervals |
| | | **MicroRex T11** |
| 1 | 0037 30 | Without working reserve – 50 Hz |
| | | **MicroRex QT11** |
| 1/10 | 0037 40 | With 100 hr working reserve – 50/60 Hz |

| | | MicroRex – 3 modules |
|---|---|---|
| | | **24 hour programme**<br>Programmable for 30 minutes minimum at 15 minute intervals |
| | | **MicroRex T31** |
| 1/10 | 0037 52 | Without working reserve – 50 Hz |

(1) Switching accuracy stated, clock accuracy is ±2·5 s/d for 'Q' range others subject to frequency

MicroRex™ time switches
analogue for rail

## ■ MicroRex – 1 module

| Type<br>Cat. No. | MicroRex<br>T11<br>0037 30 | <br>QT11<br>0037 40 |
|---|---|---|
| Supply voltage | 230 V∿ +10% –15% | |
| Frequency | 50 Hz | 50/60 Hz |
| Switching capacity :<br>cos φ = 1<br>incandescent lamp<br>cos φ = 0·6 | 16 A<br>4 A<br>10 A | |
| Contact | On/off | |
| Working reserve | None | 100 hours |
| Min. switching time | 15 minutes | |
| Interval | 15 minutes | |
| Operating temp. | –10 °C. . . +55 °C | |

## ■ Dimensions

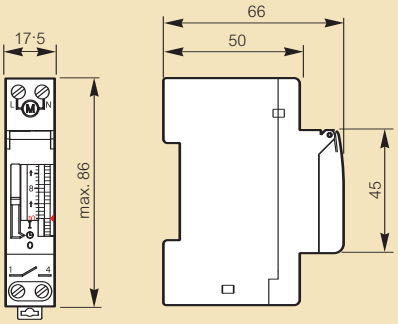


## ■ Wiring diagram

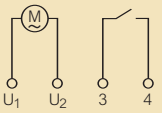


## ■ MicroRex – 3 modules

| Type<br>Cat. No. | MicroRex<br>T31<br>0037 52 | <br>QT31<br>0037 53 | <br>QW31<br>0037 55 |
|---|---|---|---|
| Supply voltage | 230 V∿ +10% –15% | | |
| Frequency | 50 Hz | 50/60 Hz | 50/60 Hz |
| Switching capacity :<br>cos φ = 1<br>incandescent lamp<br>cos φ = 0·6 | 16 A<br>4 A<br>10 A | | |
| Contact | Changeover switch | | |
| Working reserve | None | 100 hours | 100 hours |
| Min. switching time | 30 minutes | | 4 hours |
| Interval | 15 minutes | | 2 hours |
| Operating temp. | –10 °C. . . +55 °C | | |

## ■ Dimensions

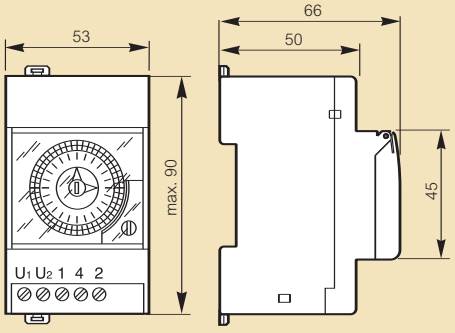


## ■ Wiring diagram

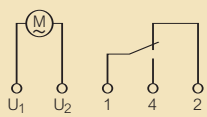



ibemo Kazakhstan - 09302 Republic of Kazakhstan, West Kazakhstan Oblast, Aksai, Pharaon Oblast, Aksai, Pharaon, BKKS office complex
Phone: +7 71133 93077, Fax: +7 71133 93074, E-Mail: info-kz@ibemo.de

# MaxiRex™ and EconoRex™ time switches
**analogue surface or 72 x 72 panel mounting**

MaxiRex™ and EconoRex™ time switches
analogue surface or 72 x 72 panel mounting

0497 54

0499 81

| Pack | Cat. Nos. | MaxiRex |
|---|---|---|
| | | Conform to EN 60730-1 and EN 60730-2-7<br>Supply voltage : 230 V∿ ±10%<br>3 position changeover switch<br>With manual override<br>Voltage free contacts |
| | | With 72 x 72 mm display to DIN EN 60715 Part C |
| | | **24 hour programme**<br>Programmable for 30 minutes minimum<br>at 10 minute intervals<br>Accuracy : ±5 minutes per day |
| | | **MaxiRex T** |
| 1/30 | 0497 50 | Without working reserve – 50 Hz |
| | | **MaxiRex QT** |
| 1/30 | 0497 54 | With 100 hr working reserve – 50/60 Hz |
| | | **7 day programme**<br>Programmable for 3 hours minimum<br>at 1 hour intervals<br>Accuracy : ±30 minutes per day |
| | | **MaxiRex W** |
| 1/30 | 0497 52 | Without working reserve – 50 Hz |
| | | **MaxiRex QW** |
| 1/30 | 0497 56 | With 100 hr working reserve – 50/60 Hz |
| | | **24 hour programme**<br>Programmable for 1·10 minutes minimum<br>at 1·10 minute intervals<br>Accuracy : ±5mins/12·5 secs<br>Other details as Cat. No. 0497 50 except<br>2 changeover switches and two dials |
| | | **MaxiRex TS** |
| 1/30 | 0497 58 | Without working reserve – 50 Hz |
| | | **Accessories for MaxiRex** |
| 5 | 0498 32 | Clip-on support frame for panel mounting |
| 5 | 0044 09 | DIN rail ⎽⎽ adaptor |
| | | **EconoRex** |
| | | Conforms to EN 60730-1 and EN 60730-2-7<br>Supply voltage : 230 V∿ ±10% 50 Hz<br>With manual override<br>Voltage free contacts |
| | | With 72 x 72 mm display to DIN EN 60715 Part C |
| | | **24 hour programme**<br>Programmable for 15 minutes minimum at<br>15 minute intervals with retained 'pull out' segments<br>Easily programmed, easily read by user<br>Just set actual time to pointer and pull out segments<br>for switch time |
| | | **EconoRex** |
| 1/30 | 0499 81 | BTAP without working reserve |

## ■ Technical information

| Type | MaxiRex T | MaxiRex QT | MaxiRex W | MaxiRex QW | MaxiRex TS | EconoRex BTAP |
|---|---|---|---|---|---|---|
| Cat. No. | 0497 50 | 0497 54 | 0497 52 | 0497 56 | 0497 58 | 0499 81 |
| Supply voltage | 230 V∿ +10% –15% | | | | | |
| Frequency | 50 Hz | 50/60 Hz | 50 Hz | 50/60 Hz | 50 Hz | 50 Hz |
| Switching capacity :<br>cos φ = 1<br>cos φ = 0·6<br>incand. lamp | 16 A<br>10 A<br>1 000 W | | | | | 16 A<br>8 A<br>1 000 W |
| Contact | 1 c/o SPDT | 1 c/o SPDT | | | | 0499 81<br>1 c/o |
| Working reserve | None | 100 hrs | None | 100 hrs | None | None |
| Min. switching time | 30 mins | | 3 hrs | | 30 mins<br>112·5 secs | 15 mins |
| Interval | 10 mins | | 1 hr | | 10 mins<br>37·5 secs | 15 mins |
| IP rating | IP 30 | | | | | |
| Storage temp. | –10 °C . . . +60 °C | | | | | |
| Operating temp. | 0 °C . . . +55 °C | | | | | |

## ■ Dimensions

**MaxiRex**

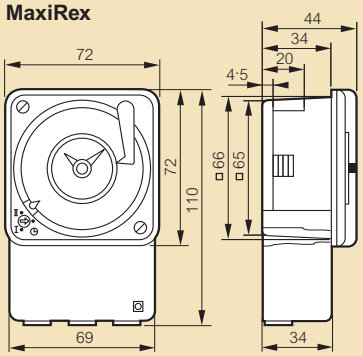


**EconoRex**

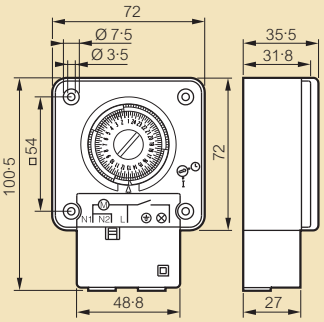


## ■ Wiring diagrams

**MaxiRex** (except TS) and **EconoRex** 0499 81

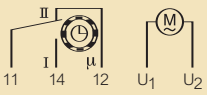


**MaxiRex TS**

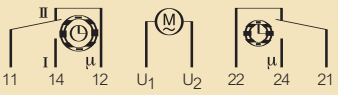


## ■ MaxiRex mounting

**Wall mounting**

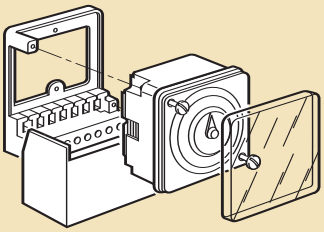

**Panel mounting**

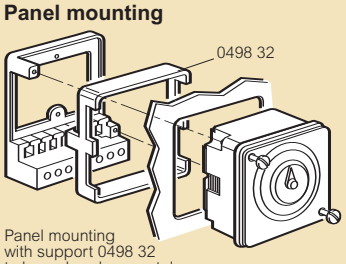


Panel mounting
with support 0498 32
to be ordered separately

**DIN rail mounting**

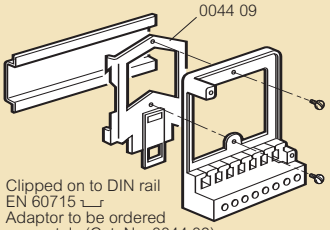


Clipped on to DIN rail
EN 60715 ⎽⎽
Adaptor to be ordered
separately (Cat. No. 0044 09)



ibemo Kazakhstan - 050012 Republic of Kazakhstan, Almaty, Medeu district, Al-Farabi Ave., 75, Rahat Palace Complex, BKKS office complex
Phone: +7 71133 93077, Fax: +7 71133 93074, E-Mail: info-kz@ibemo.de

# AstroRex light control time switches
digital for rail

0047 64

0047 72

0047 73

Set-up and features (p. 373)

Conform to IEC/EN 60730-1 and IEC/EN 60730-2-7
LCD digital display and text based programming for easier use
Mount on DIN rail EN 60715

| Pack | Cat. Nos. | AstroRex |
|---|---|---|
| | | Accuracy : ± 0·2 second per day<br>Programmable for 1 minute minimum at 1 minute steps by day(s) or week blocks, either directly or via a PC with Legrand software and data key<br>Programmable either directly on the time switch or via a PC with the Legrand software and data key<br>For switching lights or other equipment in accordance with sunrise/sunset ± 120 mins without the need of an external light detector<br>Accepts additional switch programmes for energy saving<br>1 programme consists of 1 ON and 1 OFF time and the allocation of any day of the week or a combination of days, plus the selected channel on the two channel version<br>**Additional features :**<br>Back lit display<br>6 year working reserve for date and time<br>EEPROM memory keeps your programme stored indefinitely<br>Optional automatic summer/winter time change<br>Holiday programme, 1 hour text function<br>Built-in hours counter, pin coded input<br>Manual switching possible<br>Sealable transparent covers |
| | | **AstroRex D21**<br>7 day, 1 channel<br>1 changeover 16 A voltage free contact 250 V 50 Hz<br>1 x 28 programmes with control input, delay-time 0 min - 23h 59 min |
| 1 | 0047 64 | 230 V 50/60 Hz supply voltage |
| | | **AstroRex D22**<br>7 day, 2 channels<br>2 changeover 16 A voltage free contacts 250 V 50 Hz<br>2 x 14 programmes |
| 1 | 0047 67 | 230 V 50/60 Hz supply voltage |

| | | Accessories |
|---|---|---|
| | | **Data key** |
| 1 | 0047 72 | Enables programmes to be stored and/or transferred from one time switch to another<br>When used with the USB adaptor (Cat. No. 0047 73 below) the data key can be programmed via a PC |
| | | **USB adaptor with software** |
| 1 | 0047 73 | Enables programmes to be written or read on a PC then transferred using the data key (Cat. No. 0047 72 above) to the time switch<br>Version 3·0 system requirements : Windows® (1) 2000, Windows® (1) ME, Windows® (1) XP, and Windows® (1) 98 second edition, 40 MB free disc space |

**Note :** AlphaSoft version 2.1 will programme both AstroRex and AlphaRex time switches

Contact our technical team if you have a previous version

(1) Windows is a registered trademark of the Microsoft Corporation

# AstroRex light control time switches
digital for rail

## Technical information

| Type<br>Cat. No. | AstroRex D21<br>0047 64 | AstroRex D22<br>0047 67 |
|---|---|---|
| **Programme** | 24 hour or 7 day | |
| **No. of channels** | 1 | 2 |
| **Programmes**(1) | 28 | 2 x 14 |
| **Switching capacity :**<br>• ohmic 230 V∿ cos = 1<br>• incandescent 0·6 lamp 230 V<br>• inductive 230 V∿ cos = 0·6 | 16 A∿<br>8 A∿<br>10 A∿ | |
| **Voltage free contact(s)** | 1 SPDT | 2 SPDT |
| **IP rating** | IP 20 | |
| **Min. programme time** | 1 minute | |
| **Switching step** | 1 minute | |
| **Accuracy** | ± 0·2 second per day | |
| **Working reserve**(2) | 6 years | |
| **Control input with delay-time** | 0 min - 23h 59min | – |
| **Programme memory** | Unlimited (EEPROM) | |
| **No. of 17·5 mm modules** | 2 | |
| **Operating temperature** | –20 °C . . . +55 °C | |

(1) Each programme comprises a switch-on and switch-off time and the associated on and off days or day blocks
(2) For time and date only

## Simple to use 4 button control

MENU Menu selection, back in menu
Actuated > 1 second = operating display

OK Confirm selection or adopt parameters

– + Select menu items or set parameters, also selection of channel in 2-channel time switch (channel 1 - channel 2)

## Dimensions

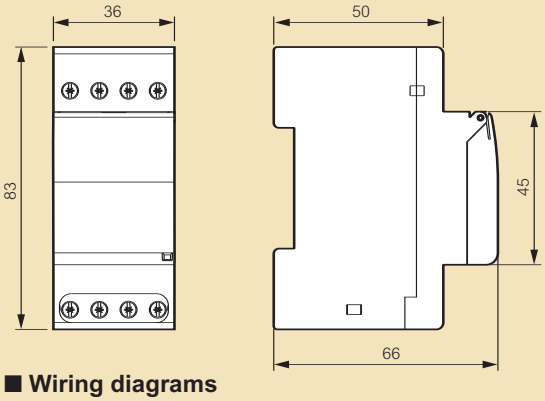


## Wiring diagrams

**AstroRex D21**

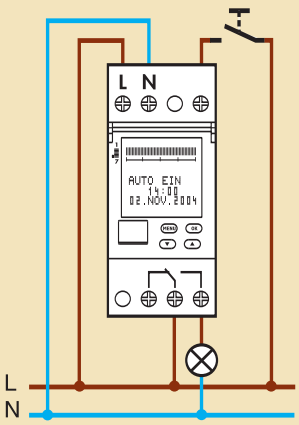


**AstroRex D22**

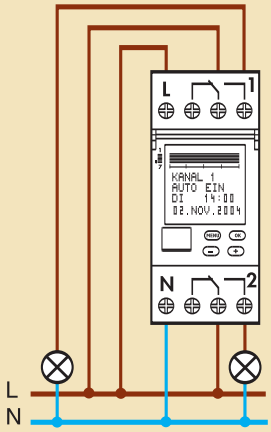



ibemo Kazakhstan - 09302 Republik of Kazakhstan, West Kazakhstan Oblast, Aksai, Rhamzo Oblast, Akshi Office Complex, BKKS office complex
Phone: +7 71133 93077, Fax: +7 71133 93077, E-Mail: info-kz@ibemo.de

## ■ Basic set up

The AstroRex will guide the user through the set up and programming in English – this can be changed to another language via the "MENU" button. Every step is shown on the backlit display. Illuminated buttons make operation easy in poor visibility.

Time, date, summer/winter time changes are preset at the factory to reduce the installation time. These can be easily amended using "MENU + SET".

Sunrise and sunset are preset for the area of SOEST in Germany. These settings are easily changed to the required location by selecting "MENU", "SET" and "ASTRO" to either the option "POSITION" or "COORDINATES".
"POSITION" = The town and country closest to the location can be selected.
"COORDINATES" = The actual coordinates for the location can be set, using the information found in the time zone map provided with the product.
The useful option of "OFFSET" enables the switching to be set back or brought forward by up to 120 minutes in relation to sunrise or sunset.

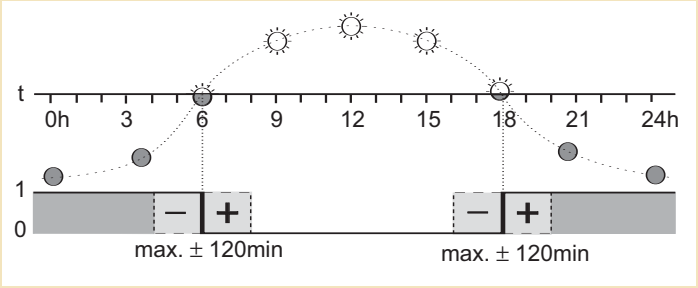


**Example :** If an offset of +30 minutes is entered the time switches 30 minutes after sunrise and 30 minutes after sunset.
If an offset of -30 minutes is entered the time switches 30 minutes before sunrise and 30 minutes before sunset.

All these settings can easily be made directly into the time switch using the four button control. The Legrand "AlphaSoft" software and data transfer key provide an easy and comfortable method of programming the time switches without site constraints. See p. 372
Data Key Cat. No. 0047 72 and USB adaptor with software Cat. No. 0047 73.

Complete reset possible - see instructions for information.

## ■ Special features

Not only will AstroRex provide the opposite basic settings but it is also packed with other useful functions. You can… change the relay settings, input holiday schedules, count the hours and reset the hour counter, set a security PIN code, make a 1 hour test, change the contrast and on the one channel version programme a delay time from an input.

### Relay settings
These can be changed via "MENU" and "FUNCTIONS".
The default is "AUTO" (it switches as programmed).
Other options are "CONST ON", "CONST OFF", and "EXTRA".
When "EXTRA" is selected, the switch contact position is reversed until the next switch command.

### Holidays
The start and end times of holidays are entered in the holiday programme and activated by the command "ACTIVE" and deactivated with the command "PASSIVE" If the holiday programme is active then the time switch will not execute any of the normal programmed settings but remains either "CONST ON" or "CONST OFF" as selected and set during the holiday period, after which it returns to the normal programmed settings.

### 1 hour test
The function "1H-TEST" can be used to simulate switching. When activated the switch outputs are switched for one hour, after which it returns to the normal programmed settings.

### PIN code
Input and programming can be disabled and reactivated using a four digit "PIN code" The inhibit can be cancelled using another means should the code be lost.

### Hour counter
The hour counter displays the relay total on time, in hours, since the last reset (max. 65,535 hours).

### Contrast
Enables the display contrast to be adjusted to suit the conditions.

### Delay-Time (D21 only)
A controlled input terminal with a delay time from 0 min to 23hrs 50min is provided. The delay time begins as soon as the voltage at the control input drops.

### Data key
The menu "KEY"- "READ"- "WRITE", is automatically activated when power is connected and the key is inserted. It can be used to store a programme from the time switch or copy the same programme to another like time switch or used with the AlphaSoft software via a PC to provide a comfortable and easy set up of the Alpha Rex light control switch. Data already saved on the key is overwritten by new data being input using the "READ" command.

The time switch can be programmed without mains voltage and the data key programmed to accept the data by selecting the "KEY" function from the "MENU". This does not work automatically when the data key is inserted and must be selected manually.

### PC programming
Using the Legrand AlphaSoft software the time switch can be easily and comfortably programmed in your office and the data transferred to the data key, which can in turn be used to programme the time switch in the workshop or on site or kept as a back up.

System requirements : USB port, Windows® 98 second edition, Windows® 2000 or Windows® XP.
40MB free memory capacity on the system drive.


ibemo Kazakhstan - 090302 Republic of Kazakhstan, West Kazakhstan Oblast, Uralsk, Khanov Makatov Str., BKKS office complex
Phone: +7 71133 93077, Fax: +7 71133 93074, E-Mail: info-kz@ibemo.de